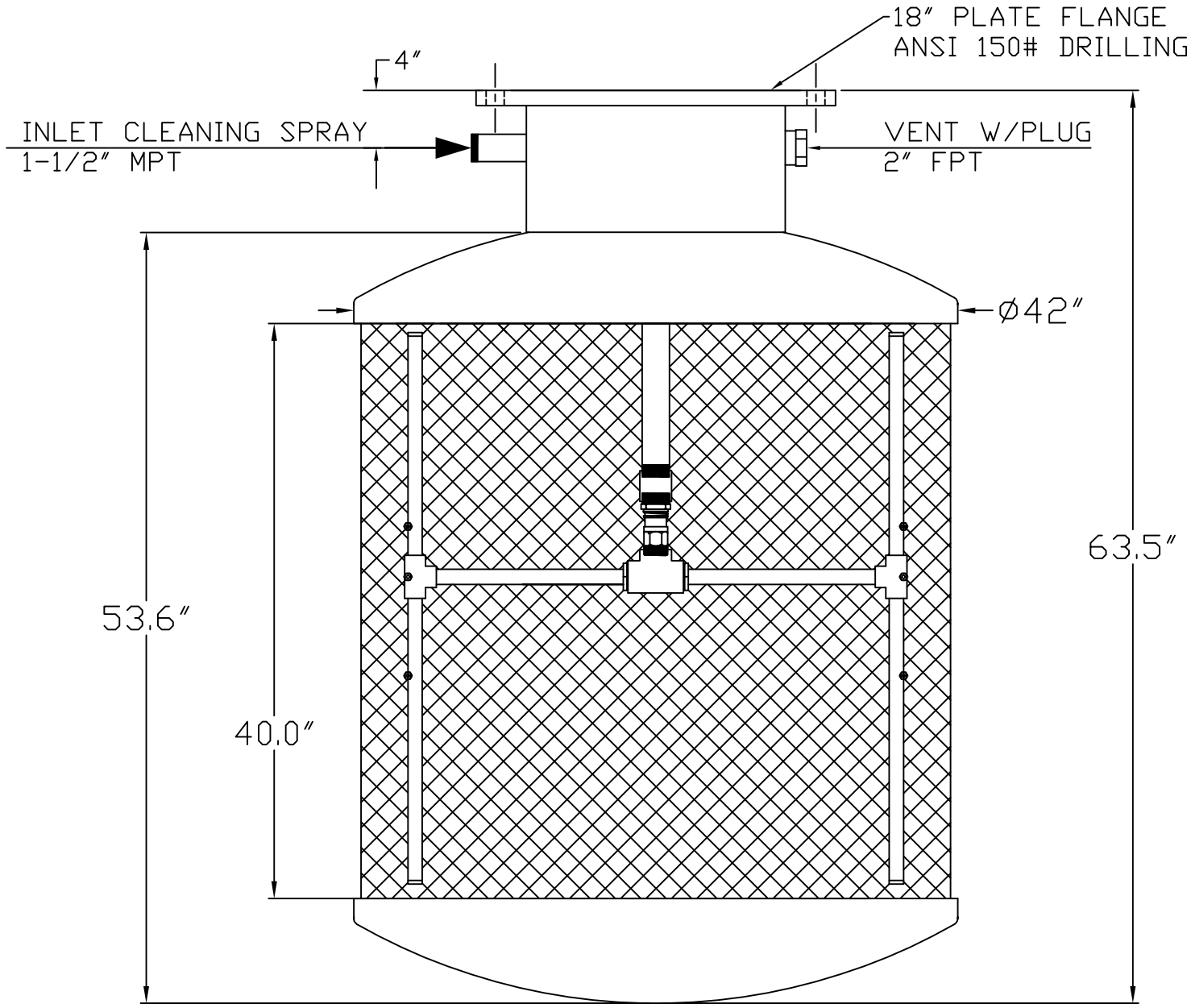


| MODEL | RATED FLOW | MESH |
|---|---|---|
| PSS4000 | 4000 GPM | 12 |
| PSS400024 | 2765 GPM | 24 |
| CLEANING SPRAY FLOW | | |
| 44 GPM @ 40 PSI MIN, 65 PSI MAX | | |

NOTICE:
THIS DRAWING EMBODIES A CONFIDENTIAL PROPRIETARY DESIGN ORIGINATED BY RAIN BIRD CORPORATION. ALL DESIGN, MANUFACTURING, USE AND SALE RIGHTS REGARDING THE SAME ARE EXPRESSLY RESERVED. IT IS SUBMITTED UNDER A CONFIDENTIAL RELATIONSHIP FOR A SPECIFIC PURPOSE AND THE RECIPIENT AGREES BY ACCEPTING THIS DRAWING NOT TO SUPPLY OR DISCLOSE ANY INFORMATION REGARDING IT TO ANY UNAUTHORIZED PERSON, OR TO INCORPORATE IN OTHER PROJECTS ANY SPECIAL FEATURE UNIQUE TO THIS DESIGN. ALL PATENT RIGHTS HERETO ARE EXPRESSLY RESERVED.

UNLESS OTHERWISE SPECIFIED:
FRACTIONAL TOLERANCE ±=1/8"
DRILLED HOLE Ø ±=1/32"
ANGULAR ±=2°
DECIMAL TOLERANCE .X = ±.100" .XX = ±.060" .XXX = ±.010"

DRAWN RFH DATE 03/03/14
DESIGNED SB DATE 09/06/10
SCALE 1:32
DO NOT SCALE DRAWING
LAST MODIFIED IN VERSION AutoCAD 2011
DWG SYMBOLS PER ANSI

RAIN BIRD
SYSTEMS MFG. DIV.
TUCSON, ARIZONA

TITLE
PSS4000
PSS400024

PROJ. NAME
CLEARWATER
SELF-CLEANING
SUCTION SCREEN

DRAWING NUMBER
RBF086
PART NO. REV.
SHEET 1 OF 1