900E

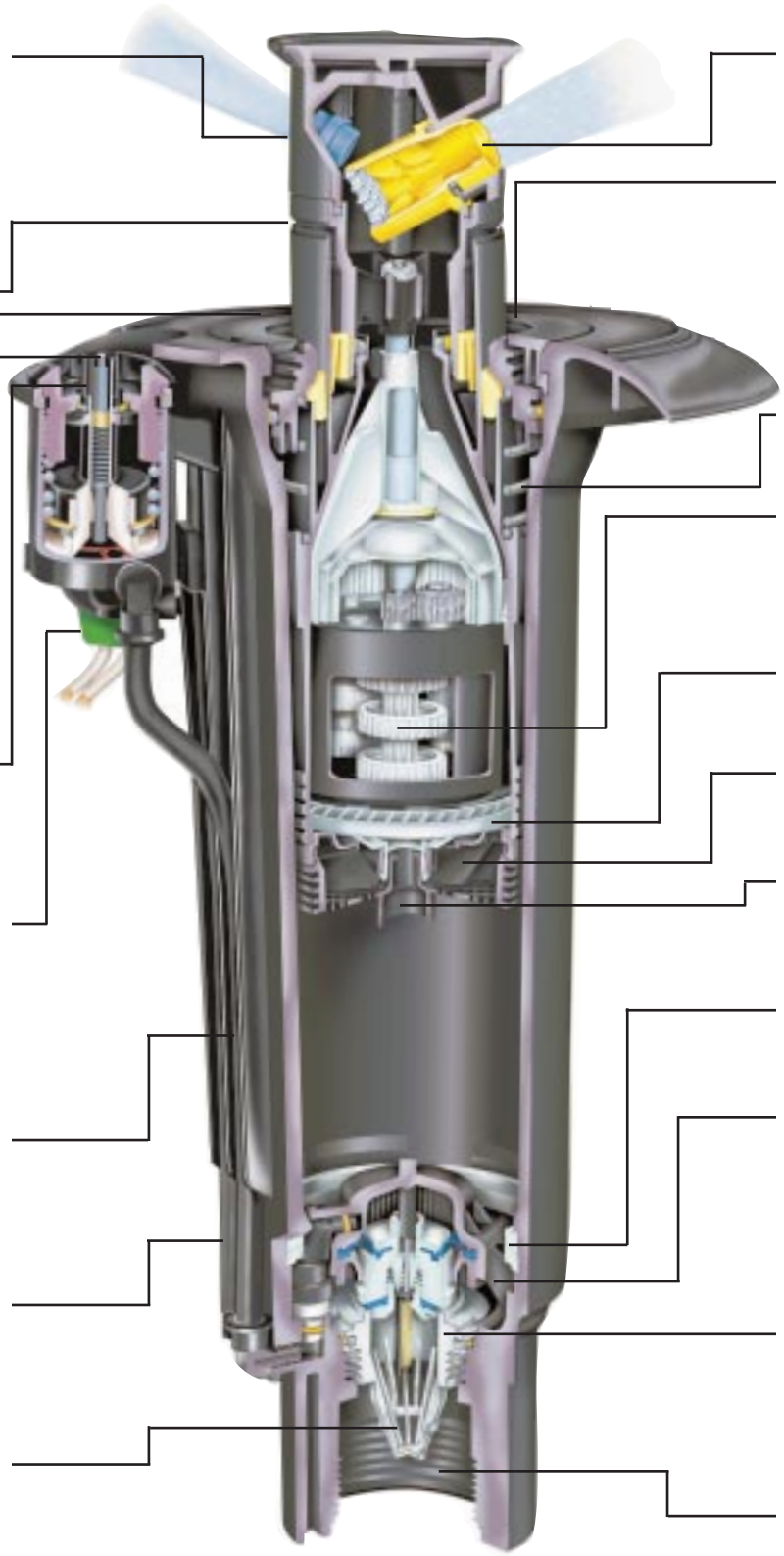

New high-performance nozzles provide excellent uniformity, especially in larger double row systems. Distribution is forgiving in stretched spacing and high wind enviroments.

3.25" (8,3 cm) pop-up height raises stream above surrounding turf.

One-piece snap cover locks assembly firmly in place.

Top-adjustable pressure regulator offers convenient access to controls.

Manual operation selector provides convenient on-the-spot on and off ability.

Heavy-duty, two-piece solenoid offers superior life and can be removed without contaminating the pressure regulation system with dirt.

Reinforced polypropylene case provides excellent protection from outside elements.

Internal bleed port saves water and eliminates puddling around the head.

Patented Top-Serviceable Rock Screen™ and Replaceable Valve Seat allow for debris removal at installation or due to build up over time.

Color-coded interchangeable nozzles add convenience and flexibility.

Closed-case design with self-flushing action protects internal assembly from debris, allows rotor to be set at grade during installation and ensures performance in all soil conditions.

Heavy-duty spring ensures positive retraction.

Water-lubricated gear drive is environmentally friendly and offers proven, trouble-free performance.

Turbine efficiently powers gear drive mechanism.

Stator ensures consistent rotation speed.

Fine mesh screen keeps debris from entering internal assembly.

Lower dual snap rings lock valve firmly in place.

High-Performance diaphragm valve offers reliable performance with little long-term wear. Rubber valve seal can be easily changed if nicked from debris.

Buttress thread of Top-Serviceable Rock Screen™ prevents misthreading and pushes out any remaining debris during installation.

1.5" (3,8 cm) molded-in NPT, BSP and ACME threads allow for easy installation.